FILE Copy (FINAL)

JOHNSON RANCH SUBDIVISION
DEVELOPMENT AGREEMENT

This Development Agreement for the Johnson Ranch Subdivision (this "Agreement") is made and entered into effective as of the 22 of July, 2008 (the "Effective Date"), by and between the **City of Bulverde, Comal County Texas**, a Texas municipal corporation (the "City"), and **DH/JB Development, Inc., a Texas corporation, (herein referred to as "Developer") and DH/JB Partnership, Ltd. a Texas limited partnership and Clyde Johnson and Sons Hereford Ranch, Ltd., a Texas family limited partnership** (herein collectively referred to as "Landowner") and Comal County Water Control and Improvement District No. 1(the "District") created pursuant to Article XVI, Section 59 of the Texas Constitution, Chapters 49 and 51 of the Texas Water Code. The City, Developer, and District are sometimes referred to herein as the "Parties." The Parties agree as follows:

Purposes, Term and Consideration

WHEREAS, the Developer plans to develop approximately 767 acres of land in Comal County, Texas, which is more particularly described in Exhibit "A" attached hereto and incorporated herein by reference (the "Land"); approximately 747.9 acres of the Land is located within the extra territorial jurisdiction ("ETJ") of the City of Bulverde, Texas; and approximately 19.08 acres of the Land is located within the corporate limits of the City of Bulverde, Texas; and

WHEREAS, Developer intends to develop the Land as a master planned, mixed use community in accordance with the Project Master Plan as defined by section 1.12 herein and attached to this Agreement as Exhibit "B", as may be changed from time to time in accordance with this Agreement. In this Agreement, the Land, as it will be developed, is sometimes referred to as the "Project"; and

WHEREAS, the City is authorized to make and enter into this written Development Agreement with Developer and Landowner in accordance with Subchapter G, Chapter 212, Local Government Code to accomplish the following purposes:

A. Extend the City's planning authority over the Land by providing for a development plan prepared by Developer and approved by the City under which certain general uses and development of the Land are authorized.

B. Authorize enforcement by the City of land use and development regulations other than those that lawfully apply within the City limits and / or ETJ as may be agreed to by Developer and City.

C. Provide for infrastructure for the Land including; (i) streets and roads, (ii) street and road drainage, (iii) land drainage, (iv) internal water storage and distribution, wastewater collection, treatment and disposal, and other utility systems, and (v) provide for good faith negotiation of limited purpose annexation of commercial areas subject to satisfactory negotiations of a strategic partnership agreement between the City and Comal County Water Control and Improvement District No. 1.

D. All other lawful terms and considerations the parties consider appropriate.

NOW THEREFORE, Developer, Landowner and City, in consideration of the premises, the mutual covenants and agreements of the Parties hereinafter set forth and other good and valuable consideration, the receipt and sufficiency of which are hereby acknowledged by the Parties agree as follows:

ARTICLE I

Definitions

1.01 Applicable Rules: The Applicable Rules are the City of Bulverde Subdivision Regulation Exhibit "I" of Ordinance No. 74-02-02-12, February 12, 2002, (Amended through Ord. No. 129, 07-22-03) and as modified by the Project Approvals and this Development Agreement, and will be applicable to the development of the Land. The parties to this Agreement acknowledge and agree that this Agreement, including the Project Approvals, amend the Applicable Ordinance as defined on the Master Plan and Developer, on behalf of itself and its assigns, including the District, stipulate and agree that this Agreement makes no other amendment or revision to City ordinance, rules, regulations, or official policies in effect on February 7, 2006. To the extent that a court makes a final determination that a Subdivision Regulation conflicts with this Development Agreement, this Development Agreement shall control. Applicable Rules may also include any subsequently adopted City rule, regulation, ordinance or official policy to the extent either (i) Developer, in its sole discretion, waives strict adherence to the Applicable Rules and develop under the subsequently adopted rules, ordinances, regulations or policies of the City or (ii) ordinances that the City is required to adopt, from time to time, by state or federal law and that are required, by law, to be applied to the Land.

1.02 "Bond" means (a) any instrument, including a bond, note, certificate of participation, or other instrument evidencing a proportionate interest in payments, due to be paid by the District, or (b) any other type of obligation that (1) is issued or incurred by the District under the District's borrowing power, without regard to whether it is subject to annual appropriation, and (2) is represented by an instrument issued in bearer or registered form or is not represented by an

instrument but the transfer of which is registered on books maintained for that purpose by or on behalf of the District. The term shall include obligations issued to refund outstanding Bonds but shall not include reimbursement agreements entered into between the District and a developer of the Development or bond anticipation notes.

1.03 City: The City of Bulverde, Comal County, Texas, a Texas general law city.

1.04 County: Comal County, Texas.

1.05 District: Comal County Water Control and Improvement District No. 1 and any subsequent district that may be created by division of said district.

1.06 Initial Term: The Initial Term of this agreement commencing on the effective date and continuing for 15 years thereafter. The Initial Term shall be automatically renewed for two successive 15-year Extension Terms unless: (i) Developer defaults in the performance of a material obligation pursuant to this Development Agreement, in which case the City may by written notice to Developer prior to the expiration of the Initial Term or the first Extension Term , elect not to extend the Agreement for the Extension Term; (ii) the Project has achieved the 90% developed benchmark described in Section 2.04 and the City , by written notice to Developer, elects not to extend the Agreement for the new Extension Term; or (iii) by mutual written agreement of the Parties, the Initial Term or first Extension Term is not extended. However, in accordance with Tex. Local Gov't Code, section 212.172(b)(1), any guarantee by the City of the continuation of the exterritorial status of the Land and the Land's immunity from annexation that may be contained in this Agreement shall not exceed fifteen (15) years from the Effective Date of this Agreement.

1.07 Land: Approximately 767 acres of land in Comal County in Texas, more particularly described in Exhibit A, attached.

1.08 Open Space: This includes all parks, trails, right-of-ways, ponds, creeks, water features, greenbelts, treated wastewater effluent irrigation areas and any common areas which benefit the community at large rather than being the private domain of individual lot owners. All of these areas shall be platted and maintained by Developer, the property owners' association or the District through the funds provided by property owners' association dues or the District revenues.

1.09 Permit Application: Any applicable preliminary plat application, final plat application, construction plans or other development approval application for the City as required by the Applicable Rules.

1.10 Project: The Land, as it will be developed under this Agreement.

1.11 Project Approvals: The approvals, variances, waivers and exceptions to the

Applicable Rules approved by the City with respect to the development of the Land, as set forth on the Project Master Plan, Exhibit B, or as otherwise provided in this Development Agreement.

1.12 Project Master Plan: The Master Plan of the Project approved on April 11, 2006 by the City Council of the City of Bulverde, a copy of which is attached hereto as Exhibit B, incorporated herein by reference, and including any amendments thereto as provided for in this Agreement.

ARTICLE 2
General Terms

2.01 City Approvals: The City agrees to approve all required Permit Applications for the use and development of the Land in accordance with the Project Master Plan, Project Approvals and Applicable Rules. Developer and City agree that only in areas of the Project located within the corporate limits of the City, the City shall be entitled to enforce all municipal land use and development regulations applicable in the same manner that such regulations are enforced elsewhere within the City's corporate limits. In accordance with Tex. Local Gov't Code, section 212.172(b)(2), the Developer agrees that the City's approval of the Project Master Plan authorizes certain general uses and development of the Land. The requirement for a modification to the Project Master Plan is described in Section 2.03 of this Agreement. So long as a Permit Application (but excluding construction plans) is in compliance with the Project Master Plan, Project Approvals and Applicable Rules, Developer shall only be required to seek approvals from the Planning and Zoning Commission which shall hereby be authorized to approve without the necessity of the City Council's approval.

2.02 Timing of Review: The City's review and approval of any Permit Application by Developer pursuant to this Agreement will not be unreasonably withheld or delayed. The City will review and provide written response to Developer for any Permit Application by Developer within 30 calendar days of submittal to the City. Failure by the City to provide said written response within 30 days of submittal to the City shall be deemed approval of the Permit Application by the City. Any requested changes by the City that do not comply with the Applicable Rules are not required to be made by the Developer for the Permit Application approval, but may be agreed to at the sole discretion of the Developer. Developer may always elect to comply with a current ordinance, rule, regulation or policy requirement in lieu of the Applicable Rules at Developer's sole discretion. Within 10 business days after the Developer has submitted the revised Permit Application to the City with the required changes, the City shall approve the revised Permit Application.

2.03 Timing of Approval: Appeal: The City acknowledges that efficient City reviews are necessary for the effective implementation of Developer's Project and agrees it will comply with all statutory timeframes and timeframes required in this Agreement for development reviews. In the event that Developer feels aggrieved

in connection with any action or decision of the City regarding the Project, City agrees Developer may immediately appeal such decision to the City Council for resolution and the City Council will take all necessary action (including any required public notices to hear the appeal at the next City Council hearing at which the matter may be legally considered).

Due to the fact that the Project comprises a significant land area and that development will occur in phases over a number of years, modifications to the Project Master Plan may become desirable due to changes in market conditions or other factors. In order to provide flexibility with respect to the development of the Project, Developer may periodically modify lot layouts, roadway alignments, phasing schedule, lot product mix, land use allocations and other development plan modifications so long as such changes will not result in a greater single-family lot density at the completion of full build-out of the Project than one residential lot per 30,000 square feet of land within the residential portion of the Project nor result in non-compliance with the Applicable Rules. The Developer agrees that such modifications shall not result in less than two Collector road intersections with Highway 281 and one connection with FM 1863. In order to maintain a record of any such modifications made to the Master Plan, each modification shall be submitted to the City and unless the City determines that the Master Plan as modified does not comply with the density required herein, roadway alignments on the Master Plan or other Applicable Rules, the City shall record its receipt and approval of the modified Master Plan and the City and Developer shall execute an amendment to the Agreement that revises Exhibit B accordingly. Unless an amendment to this Agreement is signed by both City and Developer, the then most recently approved Master Plan or modification of the Master Plan remains in effect.

2.04 Comal County Water Control Improvement District #1 (the "District"): The City acknowledges that the District may be divided into one or more subsidiary districts in the future in accordance with Section 51.748-51.753 Texas Water Code in furtherance of Developer's Project development goals. The City agrees it will not protest any such divisions or the conversion of the District from a Water Control Improvement District to a Municipal Utility District or other statutory utility district nor will the City oppose addition of any statutory powers allowed to be held by the District. The Developer agrees to notify the City in the event it makes any such division, conversion, or addition of statutory powers. In accordance with Tex. Local Gov't. Code, section 42.0425, the District shall not add any territory to the District without the consent of the City. Notwithstanding the foregoing, unless the City is capable of providing the services provided by the District at rates and on conditions not significantly different from the District, the City agrees to consent to adding such territory in a timely manner.

2.05 Water and Wastewater Design and Inspections: The City acknowledges that the District, in accordance with TCEQ requirements, will be responsible for the establishment of all water and wastewater design specifications, construction

inspections, and operation and maintenance of internal water and wastewater systems ("Wet Utilities") and will accordingly review and approve all plans and specifications for Wet Utilities prior to construction and will inspect completed Wet Utilities prior to acceptance for operation and maintenance. Subject to the approval of Fire and EMS District #4, the following flow for fire demands shall be used in the design of the water distribution system: (1) Single family residential – 1,000 gpm for 2 hour duration; (2) Mixed-use commercial areas – 3,500 gpm for 2 hours. The fire flow analysis will be conducted by placing the fire demand on all nodes within the system, one node at a time under peak day demand. Under these conditions (fire flow plus peak day demand) the distribution system must maintain a minimum residual pressure of 20 psi and the velocity in any main in the system may not exceed 10 feet per second. In order to avoid duplication of effort and unnecessary cost, no City review of the construction plans and specifications or City inspection of Wet Utilities shall be required and no related fees shall be collected by the City, so long as these Wet Utilities plans and specifications are certified by a Professional Engineer to meet or exceed the design requirements of the Applicable Rules or such other requirements as are agreed to in writing by the City engineer. If requested by City, Developer agrees to provide City a copy of each set of approved plans and specifications, and all related contract documents, including notices requesting bids and bids. All inspections of Wet Utilities shall be performed by an inspector holding valid certifications and licenses to conduct such inspections.

2.06 Street and Drainage Construction Plans: Following, or in conjunction with, the final plat approval, Developer shall prepare and submit construction plans and specifications for review and approval by the City of all street, drainage, and water detention ponds. All such plans shall meet or exceed the minimum standards of the Applicable Rules. The City may delegate to the County by interlocal agreement the review and/or construction inspection of such infrastructure design and construction should it so desire, but the City agrees that it shall not require the Developer to be subject to dual submission of plans and specifications for review and approval, or dual inspection of such construction. If requested by City, Developer agrees to provide City a copy of each set of approved plans and specifications, and all related contract documents, including notices requesting bids and bids All inspections of facilities shall be performed by an inspector holding valid certifications and licenses to conduct inspections of the facilities

2.07 Project Continuation: In consideration of Developer's covenants in this Agreement, the City agrees that during the term of this Agreement it will not impose any moratorium on building or development within the Project or any land use or development regulation that limits the timing of development approvals, whether such moratoriums affect preliminary subdivision plans, final plats, site plans, building permits, certificates of occupancy or other necessary approval within the Project, unless the City determines that the conditions described in Texas Local Gov't Code, chapter 212, subchapter E exist and the City complies

with the procedures and requirements of said subchapter E. No City imposed moratorium or other limitations affecting the timing of development or permits to construct all or any part of the Project shall apply to the Land if such moratorium or other limitation conflicts with this Agreement or would have the effect of increasing Developer's obligations or decreasing Developer's rights and benefits under this Agreement, unless the City determines that the conditions described in Texas Local Gov't Code, chapter 212, subchapter E exist and the City complies with the procedures and requirements of said subchapter E. This provision shall not apply to a temporary moratorium uniformly imposed throughout the City's jurisdiction due to an emergency constituting an imminent threat to the public health or safety, provided that the temporary moratorium continues only during the duration of the emergency.

ARTICLE III
The Project

3.01 The Project.: The Project is a master planned, mixed use community that may include the lawful uses, together with park and recreational facilities, depicted on the Master Plan. It shall include public space for water storage and distribution facilities, wastewater collection, treatment, and effluent disposal improvements, lift stations, detention ponds, and other improvements as may be necessary to implement the Project Master Plan.

The Project shall also include the construction of all streets internal to the Project, all sidewalks, lighting, street and land drainage, centralized water and wastewater utilities, electric utilities, telephone and other data communication or other facilities necessary to implement the Project Master Plan.

3.02 Single Family Residential Use: All single-family residential lots shall be of a minimum dimension of 50-feet by 110-feet, with cul-de-sac lots having a minimum width of not less than 30 feet, measured at set back. The density of all single-family residential areas shall be limited to one single-family lot per 30,000 square feet of gross land area within the residential portion of the Land (which includes all areas not developed as commercial, retail, industrial or mixed use). The density in individual single-family plats may vary above or below this overall density requirement, so long as the overall completed single-family residential density of the Project at full build out does not exceed the requirements of this Section 3.02. With each final plat submittal, Developer shall provide a cumulative calculation of single family lots platted versus the total single family lots allowed based on the area of the residential development areas designated on the Project Master Plan.

3.03 Restrictions: The Developer agrees to restrict the residential portion of the Project to site-built homes as opposed to importation of completed manufactured housing. Pre-fabricated (panelized) type housing that is constructed on site on conventional slabs will be allowed. Developer also agrees that restrictive

covenants for residential areas will include, among other things: guidelines for minimizing light pollution, minimum masonry requirements, use restrictions, and landscape and design criteria. The details of such restrictive covenants are to be determined at a later time at the sole discretion of the Developer. The Developer agrees to use underground utilities for all new internal lines, excluding main transmission lines and utility lines along the boundary of the Project.

3.04 Mixed Use Area: Within the mixed use areas as shown on the Project Master Plan, Developer may develop all legal uses including, but not limited to, apartments, town homes, condominiums, hospital services, medical offices, convalescent services, assisted living, nursing homes, other congregate care facilities, general retail sales, restaurants, theatres, commercial recreation facilities, hotel or motel facilities, general or professional offices, childcare services, communication services, office warehouse and/or light manufacturing. All such mixed use development shall comply with the Applicable Rules and any environmental requirements of the TCEQ and other applicable regulatory agencies having jurisdiction over the Project.

3.05 Internal Streets and Driveways: Developer and City agree that all internal streets and driveways as shown on the Master Plan will be built to the Johnson Ranch Subdivision Street and Drainage Specifications attached hereto and incorporated herein by reference as Exhibit "C".

3.06 Drainage and Detention Facilities: Drainage and detention facilities shall be designed and constructed in accordance with all drainage and detention requirements as provided by the Applicable Rules. The drainage and detention facilities shall be designed to serve only the Project and shall not be required to assume developed conditions of any off-site properties.

3.07 Wet Utilities: All centralized water and wastewater utility services serving the Project shall be provided by the District and / or GBRA and the City shall have no obligation to provide water or wastewater utility services to the Project. All plans and specifications for water and wastewater utility services shall be reviewed, approved and inspected by the District and / or GBRA. A copy of such approved plans shall be provided to the City.

3.08 Dry Utilities: Any natural gas, electric, telephone and data communication utility infrastructure plans shall be designed to meet the requirements of the specific utility service provider and shall be inspected and accepted for maintenance by said utility service provider.

3.09 Parks: The Project will include at least one neighborhood park area that will include family oriented park equipment (such as playscapes, slides, etc.). Any such park will be dedicated to either a property owners association with assessment powers or to the District at the discretion of Developer for operation and maintenance. Upon annexation of the District by the City, in accordance with

the law, District-owned parks shall become the property of the City. To the extent that such property is utilized by property owners of the Land as an amenity, and so long as the Developer, property owners' association, or other Developer-designated entity maintains said park areas for such purposes, such park areas shall only be available for use by property owners of the Land. Any lease or option to buy a District-owned park shall terminate upon annexation of the District.

3.10 Open Space: Open Space will be owned either by a property owners' association with assessment powers or the District at the discretion of Developer. Upon annexation of the District by the City, in accordance with the law, all District-owned Open Space shall become the property of the City. To the extent that such Open Space is utilized by property owners of the Land as an amenity, and so long as the Developer, property owners' association, or other Developer-designated entity maintains said Open Space for such purposes, such Open Space shall only be available for use by property owners of the Land.

3.11 Detention Pond/Water Quality Ponds: Water quality ponds, if necessary to meet TCEQ requirements, and detention ponds may be located within the Open Space areas of the Project Master Plan. Maintenance of all Open Space areas and improvements thereon shall be provided by either a property owners' association with assessment powers or the District at the discretion of Developer.

3.12 Beneficial Re-use Permit: Developer agrees to apply to TCEQ for a beneficial re-use permit to allow for the re-use of treated effluent to irrigate common areas where it is feasible. The City agrees to provide written support for the Developer's efforts in obtaining this permit and other additional permits needed for expansion and /or modification to the existing permit so long as the permit requests are in accordance with applicable TCEQ regulations and the Applicable Rules.

3.13 Wastewater Treatment Service for the City: Developer agrees to allow the City to obtain capacity in the Project's planned wastewater treatment facility subject to all of the following conditions:

a) City shall reimburse the Developer for the pro rata share of the total costs of the wastewater treatment system including, but not limited to, engineering, legal and consulting fees, permitting fees, interest and other carry costs, administrative costs, and cost of construction. The City's pro rata share shall be determined by the City's requested capacity in the treatment system, expressed in Equivalent Dwelling Units or Living Unit Equivalents, as the numerator and the total capacity in the treatment system as the denominator;

b) City shall provide the disposal area for that portion of the treated effluent attributable to the City's requested capacity outside of the Project or obtain authorization to discharge that portion of the treated effluent attributable to the City;

c) City shall obtain all permits for this offsite treated effluent disposal area, or discharge, including but not limited to TCEQ and Edwards Aquifer Authority permits;

d) City shall acquire the necessary property and shall permit and construct the offsite wastewater collection system infrastructure including, but not limited to, all pipelines and lift stations to and from the City's area to be serviced. Developer agrees to provide City copies of its wastewater collection and effluent disposal master plan and any amendments thereto within 30 days after their completion for the purpose of allowing the City to identify potential routes that could be used to transport wastewater from the City to the wastewater treatment plant and to transport treated effluent from the plant to the City's disposal areas. Developer and City acknowledge that it may be beneficial under certain circumstances to design and construct certain facilities jointly and agree to discuss such opportunities as they may occur, but there is no obligation whatsoever by either party to the other to do so. Nothing in this Agreement is intended to restrict, nor shall this Agreement be construed to restrict, the authority of the City to enforce its rights to acquire property by its lawful use of eminent domain powers.

e) City shall obtain any CCN(s), if necessary, for areas to be serviced by the City reserved capacity;

f) If required by any contract Developer and / or District has with Guadalupe Blanco River Authority ("GBRA") for the operation of the Project's wastewater treatment operations, the City shall receive written approval from GBRA to serve proposed areas outside the Project utilizing the Project's wastewater treatment facility

g) City shall obtain all necessary permits from TCEQ for the disposal capacity in excess of the capacity needed to serve the total single-family, mixed use and other areas of the Project. All of the requirements and approvals in this section are the sole cost of the City.

3.14 Fire Suppression: Developer agrees to design and construct the internal water distribution system to meet the needs of fire suppression throughout the Project consistent with the requirements of 2.05 herein.

ARTICLE IV
Annexation Schedule

4.01 **DEVELOPER, DISTRICT, AND ALL FUTURE OWNERS OF THE PROPERTY, INCLUDING END-BUYERS IRREVOCABLY AND UNCONDITIONALLY CONSENT TO THE FULL PURPOSE**

ANNEXATION OF THE PROPERTY INTO THE CORPORATE LIMITS OF THE CITY IN ACCORDANCE WITH THIS AGREEMENT AND WAIVE ALL OBJECTIONS AND PROTESTS TO SUCH ANNEXATION AND WAIVE ALL RIGHTS TO ARBITRATION OR MEDIATION REGARDING THE ANNEXATION. THIS AGREEMENT SHALL SERVE AS THE PETITION OF THE DEVELOPER AND ALL FUTURE OWNERS OF THE PROPERTY TO FULL PURPOSE ANNEXATION OF THE PROPERTY IN ACCORDANCE WITH THIS AGREEMENT.

4.02 Division of District. If the District divides, the City may annex the territory within a divided district when the conditions described in this Agreement relating to the District are satisfied as it pertains to the territory within the divided District.

ARTICLE V

ISSUANCE OF BONDS BY DISTRICT

5.01 Purposes. The District may issue Bonds without approval of the City Council so long as the purposes of the bonds are allowable pursuant to statutes, rules, guidelines and regulations of the State of Texas that are applicable to the District.

5.02 Bond Requirements. The District shall obtain all state required authorizations for Bond issuances to finance the acquisition, construction or maintenance of infrastructure for the benefit of the District in accordance with this Agreement and laws applicable to the District.

5.03 Certifications. With respect to any matter required by this Article V to be certified in writing, this Agreement also requires, and the District hereby warrants, that, to the best of its knowledge and understanding, every statement in any certification shall be true and correct in all material respects and that the person signing the certification has been given the requisite authority to do so on behalf of the District.

5.04 Notice of Bond Issues. Concurrently with submission of an application for approval of issuance of Bonds to the TCEQ, if requested by the City, the District shall deliver to the City a copy of such application.

5.05 Official Statements. Within 30 days after the District closes the sale of each series of Bonds, if requested by the City, the District shall deliver to the City Manager a copy of the final official statement for such series of Bonds. If the City requests additional information regarding such issuance of the Bonds, the District shall promptly provide such information at no cost to the City so long as the cost does not exceed $100.00.

5.06 Notice Requirements. The District shall: (a) send a copy of each order or other action setting an ad valorem tax rate to the City within 30 days after the District adopts the rate; (b) send a copy of each annual audit to the City within 30 days

after approval by the Board; and (c) provide copies of any material event notices filed under applicable federal securities laws or regulations to the City within 30 days after filing such notices with the applicable federal agency.

ARTICLE VI
ANNEXATION OF DISTRICT BY CITY

6.01 General Terms. The Parties acknowledge that the creation of the District, and the City's consent thereto, are for purposes that include promoting the orderly development and extension of City services to the Development upon annexation.

6.02 Incorporation. In furtherance of the purposes of this Agreement, the District and Developer, on behalf of themselves and their respective successors and Assignees, covenant and agree to the extent allowed by law that, except upon written consent of the City Council, neither the District nor Developer will: (a) seek or support any effort to incorporate the Development or any part thereof; or (b) sign, join in, associate with, or direct to be signed any petition seeking to incorporate any of the Development or seeking to include any of the Development within the boundaries of any other incorporated entity.

6.03 Limited Purpose Annexation. The Parties agree that, subject to entering into a Strategic Partnership Agreement with the District, the City shall have the right to annex those portions of a District that are intended for retail development for the sole and limited purpose for the City to impose its sales and use tax within the boundaries of such retail areas, pursuant to Section 43.0751 of the Local Government Code. The terms and conditions upon which such limited purpose annexations may occur shall be set forth in the Strategic Partnership Agreement. **Failure of the City and the District to enter into the Strategic Partnership Agreement shall in no way diminish, invalidate, or otherwise terminate any unrelated sections of this Agreement.**

ARTICLE VII
Assignment of Commitments and Obligations/Amendment

7.01. Assignment. The Developer's rights and obligations under this Agreement may be assigned by the Developer to one or more purchasers of all or any portion of the Property.

7.02 Binding. This Agreement shall be binding upon the Parties, their successors and assigns throughout the term and any Extension Terms in accordance with the provisions of Chapter 212, Sub-Chapter G, Local Government Code. The Agreement may only be amended by the joint action of the City Council of the City of Bulverde and Developer or its successors and assigns with respect to all or such portion of the Land to which such amendment may apply.

7.03 Adding Property. At any time, if the Developer desires to acquire additional

property adjacent to (including property sharing frontage on a public roadway) the Land or any other land in the future that Developer desires to be bound by this Agreement ("Additional Land"), the Developer may submit a request to the City to revise the Project Master Plan to reflect the Additional Land. In conjunction with this request the Developer shall provide a revised Exhibit A and Exhibit B incorporating the Additional Land into a revised Land and Project Master Plan, respectively. If, in accordance with the Timing of Review and Timing of Approval in this Agreement, the City approves the Developer's revised Project Master Plan, the new Additional Land shall have all of the rights and obligations under this Agreement and Exhibits A and B of this Agreement shall be revised to incorporate the Additional Land into this Agreement.

ARTICLE VIII
Default

8.01 Notice. Notwithstanding anything herein to the contrary, no party shall be deemed to be in default hereunder until the passage of thirty (30) business days after receipt by such party of notice of default from the other party. Upon the passage of thirty (30) business days without cure of the default, such party shall be deemed to have defaulted for purposes of this Agreement. However, if the breach is not reasonably susceptible to cure by the breaching Party within such 30-day period, the non-breaching Party shall not bring any action so long as the breaching Party has commenced to cure the default within such 30-day period and diligently completes the cure within a reasonable time without unreasonable cessation of the work

8.02 Remedies for Breach. If the breaching Party does not cure such breach within the stated period of time, the non-breaching Party may, in its sole discretion, and without prejudice to any other right under this Agreement, law, or equity, seek an action under the Uniform Declaratory Judgment Act, specific performance, mandamus, injunctive relief, and other remedies described in this Agreement; provided, however, (a) the non-breaching Party shall not be entitled to terminate this Agreement, (b) each Party specifically waives any right such Party has or in the future may have to terminate this Agreement unless and until the breach is cured or the alleged breaching party is found through the remedial action to not be in breach, and (c) it is understood and agreed that no Party will seek or recover actual, consequential or any other type of monetary damages or awards.

ARTICLE IX
Notices

9.01 Any notice to be given hereunder by any party to another party shall be in writing and may be effected by personal delivery or by sending said notice by registered or certified mail, return receipt requested, to the address set forth below. Notice shall be deemed given when deposited with the United States Postal Service with sufficient postage affixed.

Any notice mailed to the City shall be addressed to:

City Administrator
City of Bulverde
30360 Cougar Bend
Bulverde, Texas 78163
(830) 438-4339 - fax

Any notice mailed to Developers shall be addressed to:

Mr. Mike Schoenfeld
13000 US Hwy. 290 West
Austin, Texas 78737
(512) 394-0635 –fax

Any notice mailed to Landowners shall be addressed to:

Mr. David Hill
102A Cordillera Ridge
Boerne, Texas 78006
(936) 639-5666 - fax

Michael Johnson
4040 Broadway, Ste. 103
San Antonio, Texas 78209
(210) 530-0200

Any notice mailed to District shall be addressed to:

Comal County Water Control and Improvement District #1
c/o Mr. Phil Haag

Any party may change the address for notice to it by giving notice of such change in accordance with the provisions of this section.

ARTICLE X
Entire Agreement

10.01. Entire Agreement. This Agreement, together with any exhibits attached hereto, constitutes the entire agreement between Parties hereto, and may not be amended except by a writing signed by all Parties and dated subsequent to the date hereof.

ARTICLE XI
General Provisions

11.01 No Waiver. Any failure by a Party to insist upon strict performance by the other Party of any provision of this Agreement shall not be deemed a waiver thereof, and the Party shall have the right at any time thereafter to insist upon strict performance of any and all provisions of this Agreement. No provision of this Agreement may be waived except by writing signed by the Party waiving such provision. Any waiver shall be limited to the specific purposes for which it is given. No waiver by any Party hereto of any term or condition of this Agreement shall be deemed or construed to be a waiver of any other term or condition or subsequent waiver of the same term or condition.

11.02 Governing Law and Venue. This Agreement must be construed and enforced in accordance with the laws of the State of Texas, as they apply to contracts performed within the State of Texas and without regard to any choice of law rules or principles to the contrary. The Parties acknowledge that this Agreement is performable in Comal County, Texas and hereby submit to the jurisdiction of the courts of Comal County, Texas, and hereby agree that any such courts shall be a proper forum for the determination of any dispute arising hereunder.

11.03 Authority to Execute. The City warrants that this Agreement has been approved by the City Council in accordance with all applicable public meeting and public notice requirements (including, but not limited to, notices required by the Texas Open Meetings Act) and that the individual executing this Agreement on behalf of the City has been authorized to do so. Developer warrants that the execution of this Agreement is duly authorized in conformity with the articles of incorporation, bylaws, partnership agreement, or other applicable organizational documents of Developer and that the individual executing this Agreement on behalf of Developer has been authorized to do so. Upon ratification of this Agreement by the District, the District warrants that this Agreement has been approved by the Board in accordance with all applicable public meeting and public notice requirements (including, but not limited to, notices required by the Texas Open Meetings Act) and that the individual executing this Agreement on behalf of the Board has been authorized to do so.

11.04 Severability. The provisions of this Agreement are severable and, in the event any word, phrase, clause, sentence, paragraph, section, or other provision of this Agreement, or the application thereof to any person or circumstance, shall ever be

held or determined to be invalid, illegal, or unenforceable for any reason, and the extent of such invalidity or unenforceability does not cause substantial deviation from the underlying intent of the parties as expressed in this Agreement, then such provision shall be deemed severed from this Agreement with respect to such person, entity or circumstance, without invalidating the remainder of this Agreement or the application of such provision to other persons, entities or circumstances except to the extent that the severed provision(s) is a dependent substantive term the removal of which affects the intent and effect of the remaining provisions.

11.05 Changes in State or Federal Laws. If any state or federal law changes so as to make it impossible for the City or the District to perform its obligations under this Agreement, the Parties will cooperate to amend the Agreement in such a manner that is most consistent with the original intent of the Agreement as legally possible.

11.06 Additional Documents and Acts. The Parties agree that at any time after execution of this Agreement, they will, upon the request of any other Party, execute and/or exchange any other documents necessary to effectuate the terms of this Agreement and perform any further acts or things as the other Party may reasonably request to effectuate the terms of this Agreement.

11.07 Amendment. This Agreement may be amended only with the written consent of all Parties and with approval of the governing bodies of the City and the District.

11.08 Interpretation. The Parties acknowledge that each party and, if it so chooses, its counsel have reviewed and revised this Agreement and that the normal rule of construction to the effect that any ambiguities are to be resolved against the drafting party shall not be employed in the interpretation of this Agreement or any amendments or exhibits hereto. As used in this Agreement, the term "including" means "including without limitation" and the term "days" means calendar days, not business days. Wherever required by the context, the singular shall include the plural, and the plural shall include the singular. Each defined term herein may be used in its singular or plural form whether or not so defined.

11.09 Aid to Interpretation. This Agreement is binding upon Developer and the District, and their successors and assigns, but sometimes in this Agreement, reference is made to the "Developer" or the "District" without specifying whether the right or obligation is binding upon such party's successors or assigns. The Parties intend that an obligation imposed on the Developer shall be binding upon the District if the District is responsible, in whole or in part, of performing Developer's obligation. The Parties intend that any reference to a Party, shall also mean and include the Party's successors or assigns, unless the plain context of the specific sentence.

11.10 No Third Party Beneficiary. This Agreement is solely for the benefit of the Parties, and neither the City, the District nor Developer intends by any provision

of this Agreement to create any rights in any third-party beneficiaries or to confer any benefit upon or enforceable rights under this Agreement or otherwise upon anyone other than the City, the District and Developer. This provision does not apply to Additional Land so long as Exhibits A and B are amended according to the provisions of Section 7.03. Further, this provision does not prohibit the Developer from assigning its rights and obligations as allowed in Section 7.01.

11.11 Conspicuous Provisions. The City, the District, and Developer acknowledge that the provisions of this Agreement set out in **bold**, **CAPITALS** (or any combination thereof) satisfy the requirements for the express negligence rule and/or are conspicuous.

11.12 Counterpart Originals. This Agreement may be executed in multiple counterparts, each of which shall be deemed to be an original.

EXECUTED in multiple originals and effective as of the 22 day of July, 2008.

CITY OF BULVERDE, COMAL COUNTY, TEXAS

By: _____
The Honorable Ray Jeffrey, Mayor

Date: 10·9·08

DEVELOPER:

DH/JB DEVELOPMENT, INC. , a Texas corporation

By: _____
David A. Hill, President, Its President

Date: 10/9/08

AND

LANDOWNER:

DH/JB PARTNERSHIP, LTD, a Texas limited partnership

By: 281 DHI Corp.,
A Texas Corporation

By:
David A. Hill, President
Date: 10/9/08

CLYDE JOHNSON AND SONS HEREFORD RANCH, LTD,
A Texas family limited partnership
By: CJ&S, LLC, a Texas limited liability company
Its sole general partner

By:
Michael G. Johnson, Managing Partner
Date:

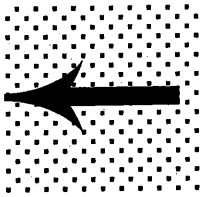

SIGN HERE

STATE OF TEXAS §
§
COUNTY OF Comal §

BEFORE ME, a Notary Public, on this day personally appeared The Honorable Ray Jeffrey, Mayor of the City of Bulverde, Texas, and known to me to be the person whose name is subscribed to the foregoing instrument and acknowledged to me that he executed the same for the purposes and consideration therein expressed on behalf of the said municipality.

GIVEN UNDER MY HAND AND SEAL of office this 9th day of October, 2008.

Notary Public in and for the State of Texas

STATE OF TEXAS §
§
COUNTY OF Kendall §

TIFFANY LITTLEPAGE
Notary Public
State of Texas
My Comm. Exp. 08-13-2011

BEFORE ME, a Notary Public, on this day personally appeared David Hill, President of DH/JB Development, Inc., a Texas corporation, and known to me to be the person whose name is subscribed to the foregoing instrument and acknowledged to me that he executed the same for the purposes and consideration therein expressed on behalf of said corporation.

GIVEN UNDER MY HAND AND SEAL of office this 9th day of October, 2008.

TAMMI BETZ
Notary Public, State of Texas
My Commission Expires
April 04, 2011

Tammi Betz
Notary Public in and for the State of Texas

STATE OF TEXAS §
§
COUNTY OF _____ §

BEFORE ME, a Notary Public, on this day personally appeared Michael G. Johnson, Managing Partner of CJ&S, LLC, the general partner of Clyde Johnson and Sons Hereford Ranch, Ltd., a Texas limited partnership, and known to me to be the person whose name is subscribed to the foregoing instrument and acknowledged to me that he executed the same for the purposes and consideration therein expressed on behalf of said limited partnership.

GIVEN UNDER MY HAND AND SEAL of office this ___ day of _____, 200_.

_____
Notary Public in and for the State of Texas

LANDOWNER:

DH/JB PARTNERSHIP, LTD, a Texas limited partnership

By: __281 DHI Corp.,
A Texas Corporation_____

By: _____
David A. Hill, President
Date:_____

CLYDE JOHNSON AND SONS HEREFORD RANCH, LTD,
A Texas family limited partnership
By: CJ&S, LLC, a Texas limited liability company
Its sole general partner

By:_____
Michael G. Johnson, Managing Partner
Date: 3/2/09

STATE OF TEXAS §
§
COUNTY OF _____ §

BEFORE ME, a Notary Public, on this day personally appeared The Honorable Ray Jeffrey, Mayor of the City of Bulverde, Texas, and known to me to be the person whose name is subscribed to the foregoing instrument and acknowledged to me that he executed the same for the purposes and consideration therein expressed on behalf of the said municipality.

GIVEN UNDER MY HAND AND SEAL of office this ___ day of _____, 200_.

_____
Notary Public in and for the State of Texas

STATE OF TEXAS §
§
COUNTY OF _____ §

BEFORE ME, a Notary Public, on this day personally appeared David Hill, President of DH/JB Development, Inc., a Texas corporation, and known to me to be the person whose name is subscribed to the foregoing instrument and acknowledged to me that he executed the same for the purposes and consideration therein expressed on behalf of said corporation.

GIVEN UNDER MY HAND AND SEAL of office this ___ day of _____, 200_.

_____
Notary Public in and for the State of Texas

STATE OF TEXAS §
§
COUNTY OF Bexar §

BEFORE ME, a Notary Public, on this day personally appeared Michael G. Johnson, Managing Partner of CJ&S, LLC, the general partner of Clyde Johnson and Sons Hereford Ranch, Ltd., a Texas limited partnership, and known to me to be the person whose name is subscribed to the foregoing instrument and acknowledged to me that he executed the same for the purposes and consideration therein expressed on behalf of said limited partnership.

GIVEN UNDER MY HAND AND SEAL of office this 2nd day of March, 2009.

_____
Notary Public in and for the State of Texas

JOHN B. LOW
MY COMMISSION EXPIRES
November 15, 2011

Notary Public in and for the State of Texas

The District has executed the Agreement.

Johnson Ranch Municipal Utility District (formerly known as Comal County Water Control and Improvement District No. 1)

By: _____
Its: Secretary
Date: 4.30.2013

STATE OF Texas §
§
COUNTY OF Travis §

This instrument was acknowledged before me, on the 30 day of April, 2013, by M. Sedlak, Secretary President of the Board of Directors of the Johnson Ranch Municipal Utility District on behalf of said entity.

[SEAL]

JENNIFER LIBRANDI-WAITS
NOTARY PUBLIC
State of Texas
Comm. Exp. 12-27-2014

_____
Notary Public, State of Texas
Printed Name: Jennifer Librandi-Waits
My Commission Expires: 12.27.14

The District has executed the Agreement.

COMAL COUNTY WATER
CONTROL & IMPROVEMENT
DISTRICT NO. ONE

By:_____
Its: President, Board of Directors

Date:_____

STATE OF _____§
§
COUNTY OF _____§

This instrument was acknowledged before me, on the ___ day of _____, 2008, by _____, President of the Board of Directors of the Comal County Water Control and Improvement District No. One, on behalf of said entity.

_____
Notary Public, State of Texas
Printed Name:_____
My Commission Expires:_____

[SEAL]

767.32 ACRES

SAVE AND EXCEPT

0.07 ACRES (SCHLATHER CEMETERY)

767.25 ACRES (NET)

BOUNDARY SURVEY

OF

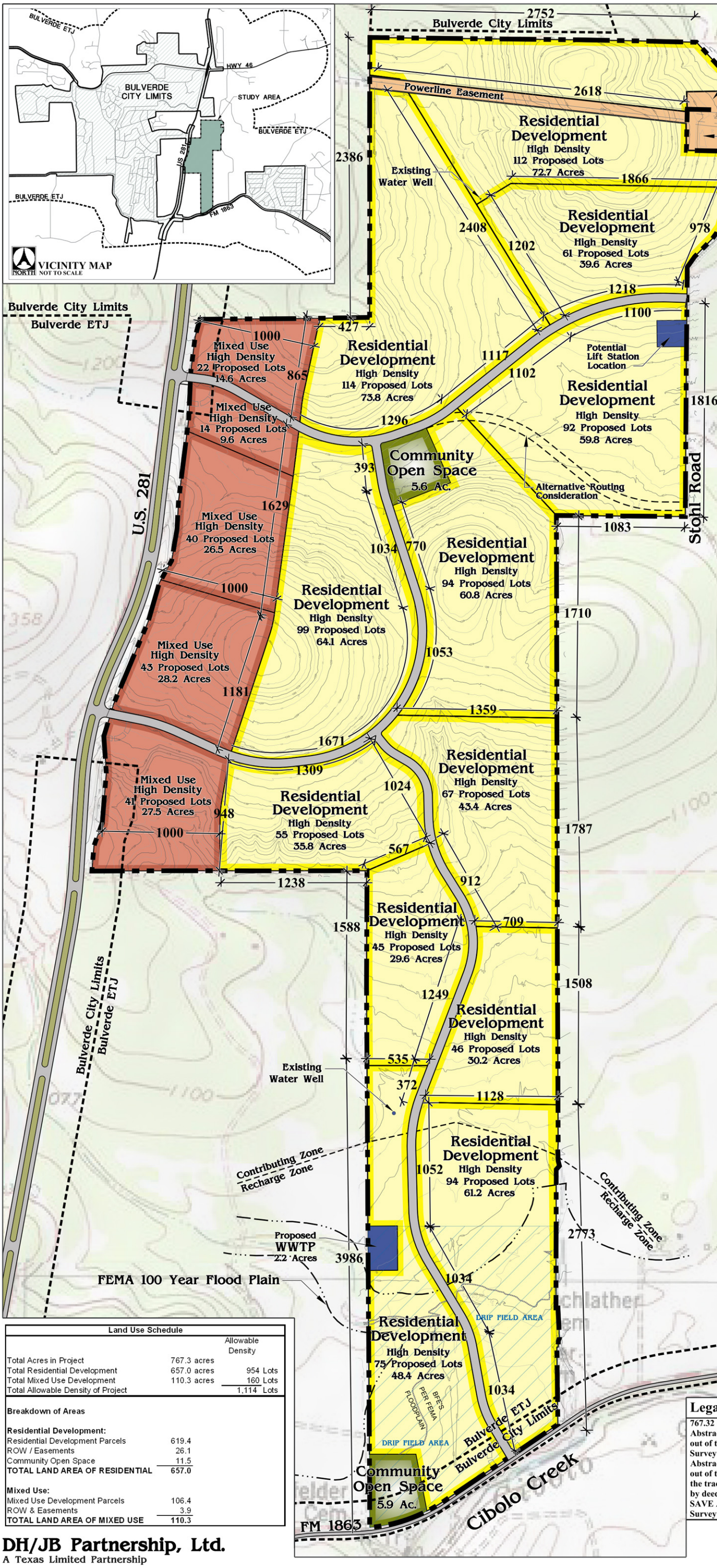

Master Plan Submittal Notes

General Note: This Master Plan is being submitted in accordance with the City of Bulverde Subdivision Regulation Exhibit "I" Of Ordinance No. 74-02-02-12, February 12, 2002, (Amended through Ord. No. 129, 07-22-03) hereinafter called the "Applicable Ordinance".

1) Project Name - Johnson Ranch - (Subject to change as platting occurs). If individually named subdivisions are developed within the Master Planned area, their names will comply with Section 1.05 (a) (iii) 1) of the Applicable Ordinance.

2) Project Owner and Subdivider - DH/JB Partnership, Ltd
C/O Mike Schoenfeld 13000 US Hwy 290 West, Austin, TX 78737.
512/394-0635. There is no lienholder.

3) Project Design Team

Planners/Landscape Architects
RVi
712 Congress Avenue, Suite 300
Austin, Texas 78701
512/480-0032

Engineers
Bury + Partners
3345 Bee Caves Road, Suite 200
Austin, Texas 78746
512/328-0011

Surveyor
M.W. Cude Engineers, L.L.C.
10325 Bandera Road
San Antonio, Texas 78250
210/681-2951

4) Developer may re-configure the boundaries of the various development parcels / subdivision areas and arrange lots and local streets therein in accordance with the Applicable Ordinance for purposes of providing, among other things, safe access and traffic circulation, lot efficiency, building envelopes, positive drainage and open space.

5) Lot counts in individual development parcels represent the estimated number of lots in any shown development parcel. The total number of lots in the overall project shall not exceed the maximum allowed pursuant to any legally effective lot density requirement in the Applicable Ordinance, if any, or as allowed pursuant to Section 202.003, Texas Local Government Code.

6) Proposed collector road intersections at US 281 are in line with existing median breaks.

7) FEMA 100 Year Flood Plain is based on FEMA maps and represents the best currently available data. However, this area is under review / study by FEMA and, upon completion, their findings will be incorporated into the design of final plats so that appropriate drainage easements can be established and no building sites will be located within the 100 year flood plain.

8) Contours are shown at 5 foot intervals in lighter colors; 10 foot intervals are shown in darker colors.

9) All proposed uses are considered High Density according to the Applicable Ordinance.

10) Estimated EDU's for water and wastewater demand for the project: 1,500

11) Total collector ROW within property limits is approximately 21,925 L.F. There are no thoroughfares.

12) Land uses proposed within the city limits of Bulverde are subject to its current applicable zoning ordinance. Mixed Use areas in the Bulverde ETJ may be used for any lawful use authorized or allowed pursuant to state law including, but not limited to, the following types of development: office, retail, commercial, restaurant, warehouse, industrial, theatre, outdoor sales and residential housing including townhomes, condominiums, duplex / triplex / fourplex, multi-family apartments, and single-family housing.

13) Off-site conditions are represented with USGS quad map information.

14) Open Space and Public Use Dedication requirements shall be accomplished in accordance with the provisions of the Applicable Ordinance as the project is final platted.

15. The Master Plan shall be accomplished in accordance with the Applicable Ordinance and any development agreement or strategic partnership agreement that may be negotiated with the City of Bulverde prior to the approval of the first final plat out of the Project's Master Plan area.

16) Wastewater effluent irrigation areas shown hereon are based on preliminary flow estimates using Best Available Data. Irrigation zones shall be contained within easements and, in some cases, may be established across portions of the residential lots. Any such areas may be modified in accordance with TCEQ approval.

17) Dimensions and locations of the various development parcels and elements shown hereon are approximate based on the 1" = 400' scale used hereon. As individual development parcels are final platted, detailed dimensions and survey information will be utilized.

18) In the event the population of the development exceeds 3,000 persons, the developer will coordinate with the school district to determine whether an appropriate site exists within the development for a school and, if it does, the developer will discuss terms and conditions of a possible conveyance with the school district.

19) Developer understands that easements and / or Rights of Way must be established and dedicated for purposes of containing drainage ways and the 100 year flood plain, utilities, rights of ways for internal roadways, additional rights of way for boundary streets, and other public uses. Such dedications as are required by the appropriate governmental authorities will occur as the developer records final plats on portions of the project.

Land Use Schedule

		Allowable Density
Total Acres in Project	767.3 acres	
Total Residential Development	657.0 acres	954 Lots
Total Mixed Use Development	110.3 acres	160 Lots
Total Allowable Density of Project		1,114 Lots

Breakdown of Areas

Residential Development:	
Residential Development Parcels	619.4
ROW / Easements	26.1
Community Open Space	11.5
TOTAL LAND AREA OF RESIDENTIAL	**657.0**
Mixed Use:	
Mixed Use Development Parcels	106.4
ROW & Easements	3.9
TOTAL LAND AREA OF MIXED USE	**110.3**

Legal Description

767.32 acres of land being approximately 162.40 acres out of the Agapita Gaytan Survey No. 194, Abstract No. 174, 30.92 acres out ofthe Julius Vogel Survey No. 720, Abstract No. 650, 150.75 acres out of the F.H. Faiguax Survey No. 787, Abstract No. 767, 171.48 acres outof the Jacob Kaderli Survey No. 465, Abstract No. 309, 162.27 acres out of the I. & G.N. R.R. Co. Survey No. 793, Abstract No. 289, 86.10 acres out of the A.L. Bueche Survey No. 582, Abstract No. 80, and 3.40 acres out of the John Kaderli Survey No. 449, Abstract No. 308, in Comal County, Texas and also being the tract of land (shown as 760 acres) conveyed to Clyde Johnson & SonsHereford Ranch, LTD, by deed recorded in Document No. 200006037239, Official Records of Comal County, Texas, SAVE AND EXCEPT 0.07 of an acre of land (Schlather Cemetery) out of the Agapita Gaytan Survey No. 194, Abstract No. 174, Comal County, Texas.

DH/JB Partnership, Ltd.
A Texas Limited Partnership

Johnson Ranch

Master Plan

Bulverde, Texas

SCALE : 1" = 400'
0 200 400 800

NORTH
02-07-06
Revised 03-24-06

rvi planning + landscape architecture
712 Congress Avenue, Suite 300
Austin, TX 78701
(512) 480-0032

File: L:\242789\Lotting Plans\City Submittals\JR-MasterPlan-March 24, 2006.dwg
The developer has reserved the right, without notice, to make changes to this map and other aspects of the development to comply with governmental requirements and to fulfill its marketing objective.

All information furnished regarding this property is from sources deemed reliable. However, RVi has not made an independent investigation of these sources and no warranty or representation is made by RVi as to the accuracy thereof and same is submitted subject to errors, omissions, land plan changes, or other conditions. This land plan is conceptual in nature and does not represent any regulatory approval. Land plan is subject to change.

Exhibit C
Modifications and Clarifications to Applicable Ordinance

INTRODUCTION:
In order to provide for the efficient development of the Property and to enable development pursuant to the cluster development concept *advocated in the City's Comprehensive Plan*, the following modifications and clarifications to the Applicable Ordinance shall be applied to the Land.

Commentary: The items contained herein are necessary because the subdivision design specifications contained in the current city ordinance were approved and implemented prior to the city's adoption of the city's Sunrise 2025 Comprehensive Plan which advocates cluster development. Under the current ordinance, cluster development as advocated in the Sunrise Plan is impossible to execute. Additionally, as our engineers have attempted to utilize applicable provisions of the current ordinance when preparing plats and construction plans, they have identified various inconsistencies as well as erroneous provisions that must be addressed in order to ensure consistency of the design criteria and processing requirements between the various governmental agencies with which developers must deal (TCEQ, City of Bulverde, GBRA, and Comal County). Each item has been discussed with and reviewed in detail by the City Engineer. He is in agreement with and endorses all proposed modifications as being necessary and / or reasonable. Where appropriate, we have addressed some of the specific reasons / benefits of certain modifications.

DENSITY:
Overall density of the Land at completion will not exceed one single-family residential lot per 30,000 square feet of gross land area in the residential portion of the Land (which includes all areas not developed as commercial, retail, industrial or mixed use). Section 3.02 of the Agreement addresses the density requirement in more detail.

Commentary: On behalf of the city, this should be the most pertinent provision of all. While the Developer strongly believes that State Law does not allow the city to regulate either density or lot size for this project, we are voluntarily agreeing to abide by a density limitation. It is well documented that the combined effect of limiting the density with the development of smaller / clustered lots among other things results in:

- *there being significantly more contiguous open space within the community*
- *less water consumption per household*
- *the ability to offer a much broader spectrum of housing products*
- *more affordable lot prices and therefore, house prices*

RESIDENTIAL LOT DIMENSIONS:
Note: The following specific modifications are necessary to allow the design of clustered residential lots:

Minimum Lot Size:	5,500 s.f.
Minimum Frontage, typical :	50' Measured at set-back
Minimum Frontage Cul-de-sac:	30' measured at set-back

Minimum Frontage – Flair back Lots on inside / outside Radius of street:	50' min – direct line between lot connection points at set-back
Minimum frontage Flag Lots:	20 feet measured @ ROW
Front Set-Back:	20 feet
Rear Set-Back:	20 feet
Side Set-Back:	5' min on each side
Aspect Ratio:	No greater than 3.5:1 unless approved By City Planning Director or City Engineer

Application of the above modifications to the following Street Standards will result in an overall reduction in impervious cover, traffic calming, and a much more attractive street-scape.

STREET STANDARDS:

Note: The roadway widths as detailed below are in accordance with the recommendations of the Sunrise 2025 Comprehensive Plan.

Street standards including ROW & total minimum drivable pavement widths (includes non-vertical potions of curb sections):

Local	50' ROW, 22' Undivided Pavement or two 11' lanes if using divided Local
Collector	60' ROW, 33' Undivided Pavement or two 17' lanes if using divided Collector
Cul-de-sacs	Allow islands with Fire / EMS Approval

- Section 2.03(b)(iii), requires road extensions at half mile intervals to the perimeter of the subdivision. In accordance with the approved Master Plan there will be a minimum of 4 access points (1 at 1863, 2 at 281, and 1 at Stahl) and this Section 2.03 (b)(iii) is waived.

The spirit of the above provision was met by the approved Master Plan.

OTHER ENGINEERING SPECIFICATIONS:

Note: The following are necessary in order to efficiently implement the cluster plan concept and achieve the maximum benefits there from.. Clarification of these requirements also ensures the best long-range, cohesive planning which is of significant benefit to Bulverde and the overall community.

- 2.03 (d) - easements for two or more utilities. Dry utilities shall be allowed to be installed either within public RoW or within 10' wide PUE's (increased to 15' if more than one trench is being cut) and the easement requirement for storm sewers (iv)(2) shall be 15' so long as the storm water transmission pipes are not greater than 36" in diameter and 4 feet in depth. In areas where these dimensions and / or depth are exceeded, enough area will be required to accommodate all construction activities, including the temporary stockpiling of soils that have been removed in the event the pipes have to be exposed for repair and such cases will be reviewed and subject to approval by the City's engineer.

- 2.03 (e)(ii)(6) Developer will designate at least 12 acres of park land which have a maximum slope of 7%. Park and / or Open Space areas in excess of 12 acres are not required to comply with this provision.
- 2.04 (a) Private streets shall be dedicated as "private street lots" with PUE & DE overlay and the plats shall note that they are to be used for public access.
- 2.04 (e) Street Geometry. To promote safety, encourage cluster planning and reduce the need for excessive cutting of the natural hill country terrain, considering the regional topography, a 25 mph design speed shall be used for the residential streets with corresponding k values. So long as Fire and EMS agrees in writing, a 15% max slope will be allowed along with a 180' minimum centerline radius. Stopping sight distance for 25 mph design speed is 155 feet. In limited areas a 20 mph design speed will be allowed if approved by the City's engineer.
- 2.04 (e)(iv) "S" curves in street alignments shall be allowed and reverse curves shall not be required to have a tangent length between the curves with a minimum length equal to twice the length of the longest curve.
- 2.04 (e)(iv)(2) Changes in direction between 75 & 105 degrees shall not be required to be made with intersections. Use of "knuckles" rather than "intersections" is permitted in those circumstances where an abrupt change in direction is within these limits.
- 2.04 (e)(vii) The stipulated 15ft radius for the curb returns is the minimum allowed. Longer radii are encouraged to accommodate safe traffic flow and lessen street and curb damage.
- 2.04 (e) All streets within individual neighborhoods are considered "Local". Use of 4" to 6" "roll" curbs and "lay-down" (flat) concrete curbs constructed in accordance with the attached schematic shall be allowed.
- 2.05 Concentrated runoff from the 100-year storm shall be contained within the public ROW's and/or drainage easements through the use of one or more of the following conveyance methods: storm sewers, ditches/swales, and, on Local roads, street conveyance.
- 2.05 (b)(iii)(2) Modified to read: The design of underground storm sewers shall be checked with 100 year storm flows and sizes increased as necessary to contain the 100 year storm in right-of-way and drainage easements using a combination of pressure flow and street conveyance.
- 2.05 (b)(iv) Modified to read: Local streets with urban street sections shall be designed so that the 100-year storm is contained within the street right-of-way with a maximum depth of one foot and the 5-year storm depth is limited to the top of the curb
- 2.06 (c)(i)(5)(c) Dead end mains in residential areas may exceed 600 feet so long as the water provider has approved the water distribution plans.
- 2.07 (c)(ii) The TPDES permit referred to herein is any SWPPP that is required by the state for construction work that disturbs more than an acre.
- 2.07 (c)(iv)(7) lift stations shall be located a minimum of 100 feet from any residential lot that existed prior to development within the Land. Lots platted within the Land do not need to meet this requirement nor is the use of pressure sewer systems to provide sewer service to lots prohibited.
- 3.02 (a) concrete monuments are not required to mark the corners of a subdivision
- 3.02 (c) markers are not required where easements cross lot lines

- 3.02 (d)(ii) all vertical contours, dimensions and benchmarks shall be referenced to NAVD 88
- 4.01 (b) The requirement for a Phase I Environmental Assessment has been met
- "TNRCC" is now referred to as the Texas Commission on Environmental Quality ("TCEQ")
- In order to minimize impervious cover and limit unnecessary disturbance, sidewalks shall not be required on both sides of every roadway so long as safe access is provided within the neighborhoods to allow pedestrians access to public facilities like schools, parks, etc. located within the neighborhood. In review of the plans, safe access shall be determined by the City's Public Works Director or City Engineering staff. Developer may appeal Public Works Director or City Engineering Staff's decision to the Planning and Zoning Commission. Some streets may require sidewalks on both sides of the street based on traffic volumes. Sidewalks may be eliminated in areas where such access is provided by trails or other means as approved by the City Public Works Director or City Engineering Staff.
- Other technical engineering design issues that may arise during development of the Land will be reviewed and approved administratively by the City Public Works Director or City Engineering Staff and will not require approval by the City Council. Technical engineering issues do not include any of the guidelines for the platting process, density requirements, lot size requirements, or general subdivision procedures.
- Sections 2.06 and 2.07 and the definition of "Equivalent Dwelling Unit" in the revised Bulverde Subdivision Ordinance as of March 11, 2008, shall govern.

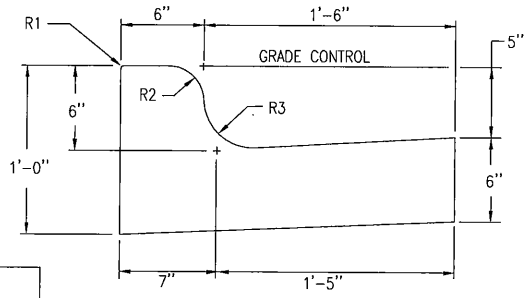

R1 = 1/4"
R2 = 2 1/2"
R3 = 3 1/2"

CURB AND GUTTER SECTION

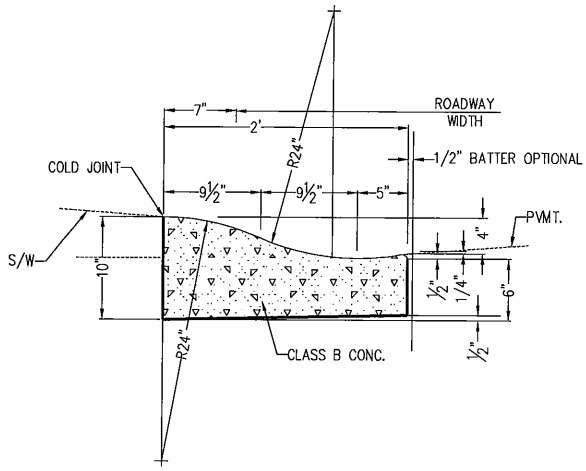

ROLLED/LAY DOWN CURB

SCALE: NTS

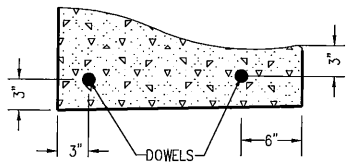

DOWEL LOCATIONS

SCALE: NTS

NOTES:

1. ALL WORK AND MATERIAL SHALL CONFORM TO SECT. 340, 505' 725 BROOM FINISH EXPOSED SURFACE.
2. CONTRACTION JOINT SPACING 10' MAX.
3. EXPANSIION JOINTS AS PER STD. SECT. 340.